EXPERIMENT-4.3

Implementation of full subtractor by using two half subtractors

OBJECTIVE:

1-To Design a Full subtractor by using 2 half subtractors

2- To verify the truth table of Full subtractor circuit

THEORY:

A full subtractor is a combinational circuit that performs subtraction of two bits, one is minuend and other is subtrahend, taking into account borrow of the previous adjacent lower minuend bit. This circuit has three inputs and two outputs. The three inputs A, B and C, denote the minuend, subtrahend, and previous borrow, respectively. The two outputs, Diff and Borrow represent the difference and output borrow, respectively. Implementation of Full Subtractor can be achieved by using 2 Half Subtractors and an OR gate.

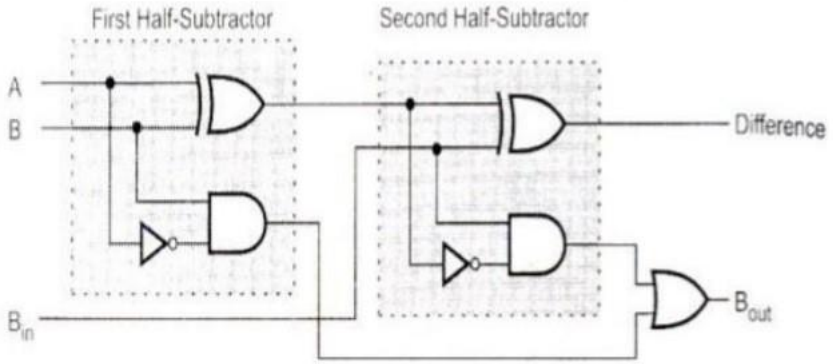

BlOCK DIAGRAM

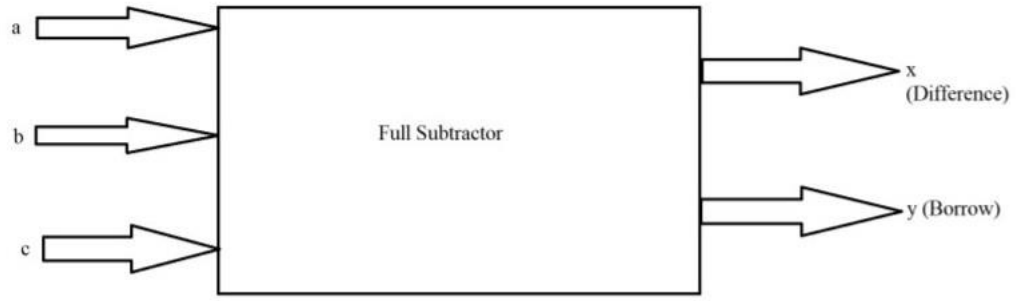

CIRCUIT DIAGRAM:

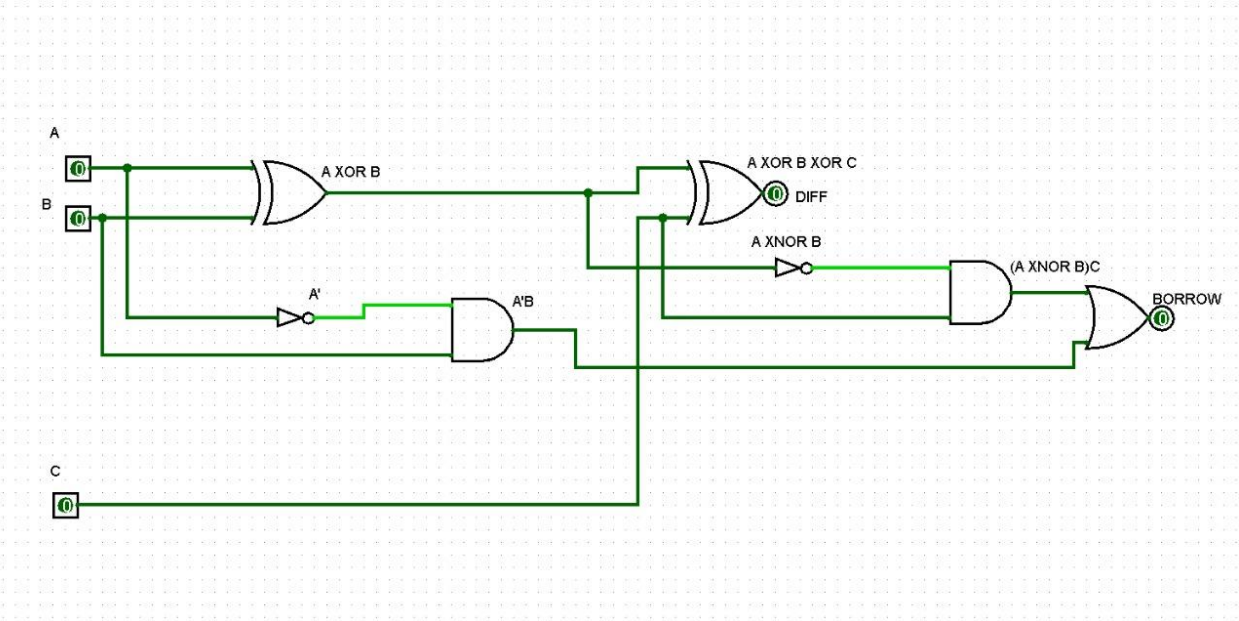

TRUTH TABLE AND EXPRESSIONS:

A	B	C	Diff	Borrow
0	0	0	0	0
0	0	1	1	1
0	1	0	1	1
0	1	1	0	1
1	0	0	1	0
1	0	1	0	0
1	1	0	0	0
1	1	1	1	1

Logical Expression

For Difference, $x = [(a \text{ XOR } b) \text{ XOR } c]$

$= (a' \cdot bc' + a \cdot b' \cdot c' + a' \cdot b' \cdot c + abc)$

For Borrow, $y = [(c \cdot (a \text{ XNOR } b)) + (a' \cdot b)]$

Where, $(a \text{ XOR } b) = (a'b + a \cdot b')$

$(a \text{ XNOR } b) = (a \cdot b + a' \cdot b')$

CONCLUSION:

From this experiment, we have learnt about Subtractor circuits, which take two binary numbers as input and subtract one binary number input from the other binary number input. Similar to adders, it gives out two outputs, difference and borrow (carry-in the case of Adder). A full subtractor is a combinational circuit that performs subtraction involving three bits, namely A (minuend), B (subtrahend), and C (borrow-in) . It accepts three inputs: A (minuend), B (subtrahend) and a C (borrow bit) and it produces two outputs: Diff (difference) and Borrow (borrow out).It has been constructed using two half subtractors in this experiment.